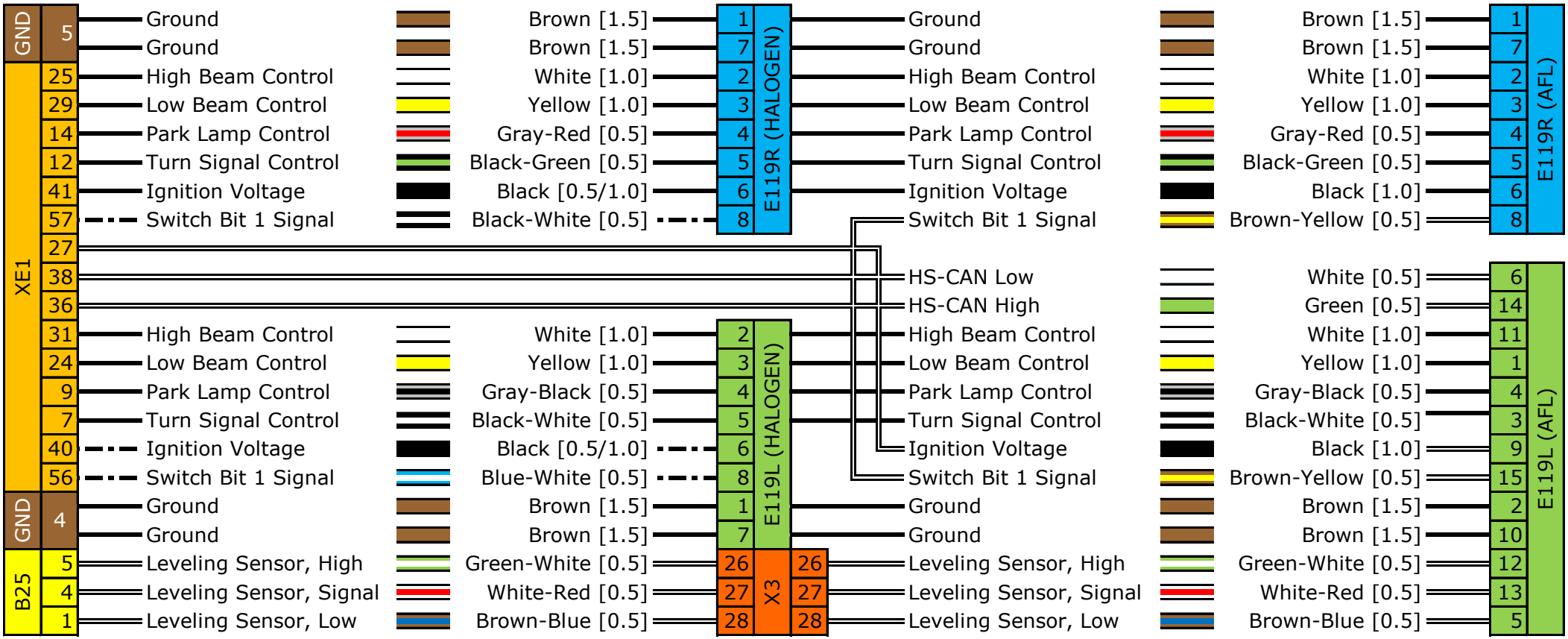
GND
5
XE1
25
29
14
12
41
57
27
38
36
31
24
9
7
40
56
GND
4
B25
5
4
1
Ground
Ground
High Beam Control
Low Beam Control
Park Lamp Control
Turn Signal Control
Ignition Voltage
Switch Bit 1 Signal
High Beam Control
Low Beam Control
Park Lamp Control
Turn Signal Control
Ignition Voltage
Switch Bit 1 Signal
Ground
Ground
Leveling Sensor, High
Leveling Sensor, Signal
Leveling Sensor, Low
Brown [1.5]
Brown [1.5]
White [1.0]
Yellow [1.0]
Gray-Red [0.5]
Black-Green [0.5]
Black [0.5/1.0]
Black-White [0.5]
White [1.0]
Yellow [1.0]
Gray-Black [0.5]
Black-White [0.5]
Black [0.5/1.0]
Blue-White [0.5]
Brown [1.5]
Brown [1.5]
Green-White [0.5]
White-Red [0.5]
Brown-Blue [0.5]
1
7
2
3
4
5
6
8
E119R (HALOGEN)
2
3
4
5
6
8
1
7
E119L (HALOGEN)
26
27
28
X3
26
27
28
Ground
Ground
High Beam Control
Low Beam Control
Park Lamp Control
Turn Signal Control
Ignition Voltage
Switch Bit 1 Signal
HS-CAN Low
HS-CAN High
High Beam Control
Low Beam Control
Park Lamp Control
Turn Signal Control
Ignition Voltage
Switch Bit 1 Signal
Ground
Ground
Leveling Sensor, High
Leveling Sensor, Signal
Leveling Sensor, Low
Brown [1.5]
Brown [1.5]
White [1.0]
Yellow [1.0]
Gray-Red [0.5]
Black-Green [0.5]
Black [1.0]
Brown-Yellow [0.5]
White [0.5]
Green [0.5]
White [1.0]
Yellow [1.0]
Gray-Black [0.5]
Black-White [0.5]
Black [1.0]
Brown-Yellow [0.5]
Brown [1.5]
Brown [1.5]
Green-White [0.5]
White-Red [0.5]
Brown-Blue [0.5]
1
7
2
3
4
5
6
8
E119R (AFL)
6
14
11
1
4
3
9
15
2
10
12
13
5
E119L (AFL)
Reused wire
Obsolete wire
New wire